Diagram 1

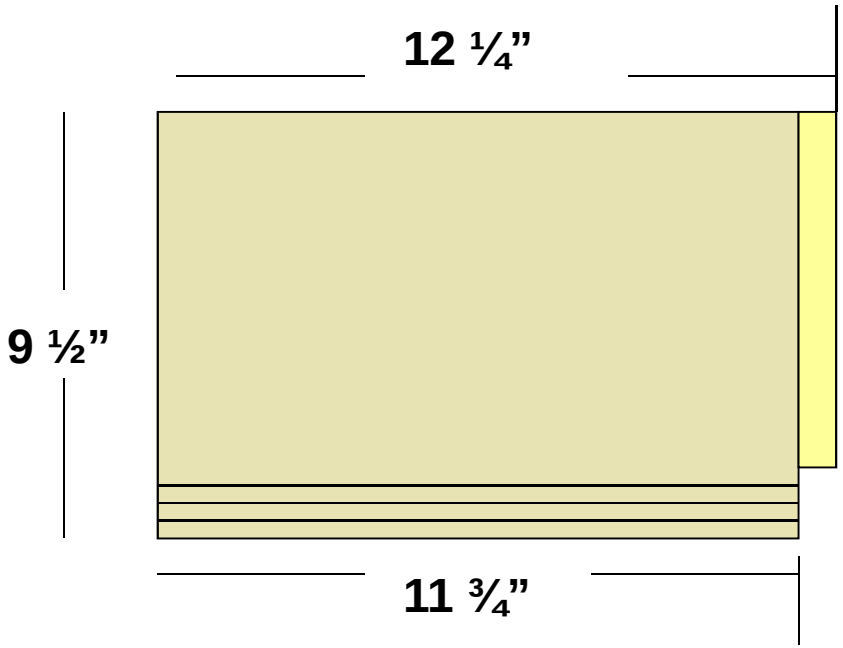

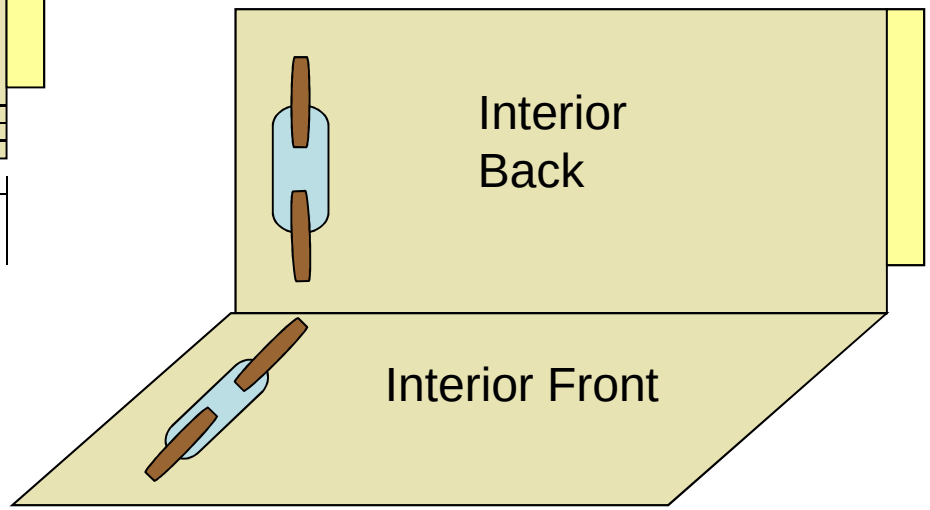

Note: Diagrams are NOT to scale or color

12 ¼”

Diagram 2

9 ½”

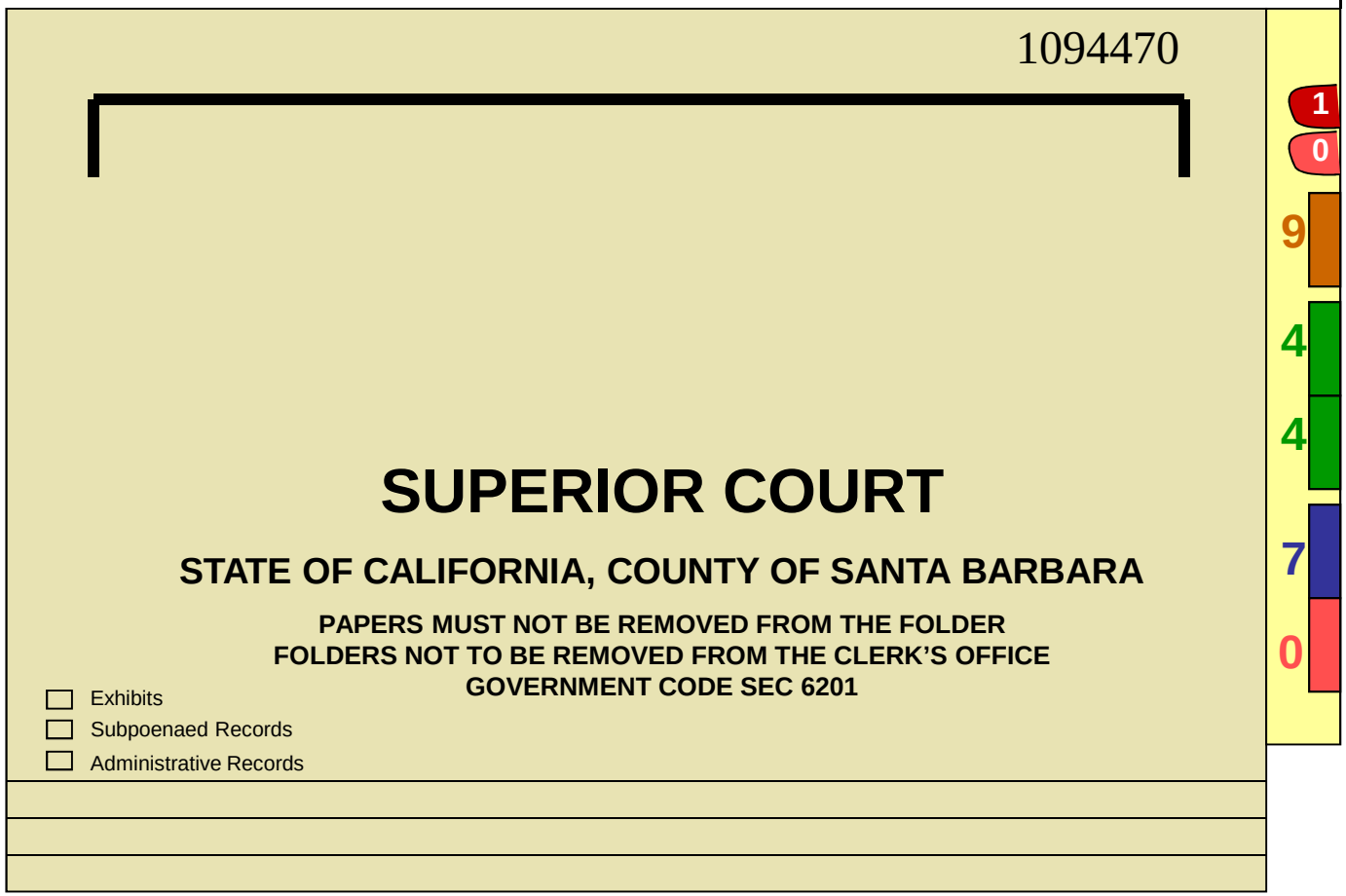

11 ¾”

Note: Diagrams are NOT to scale or color

Diagram 3

12 ¼”

9 ½”

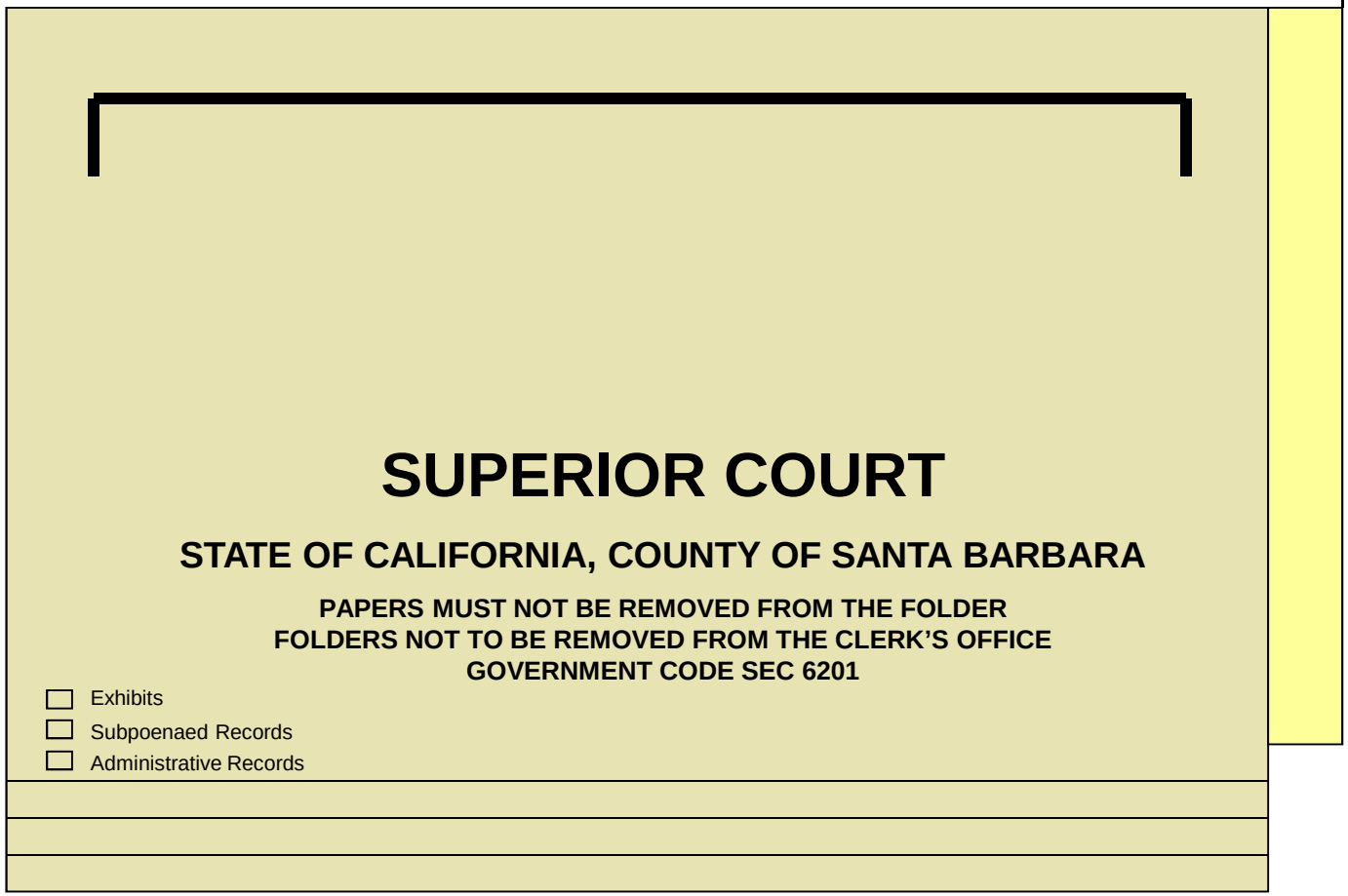

11 ¾”

Blank File Folders

Note: Diagrams are NOT to scale or color

Diagram 4

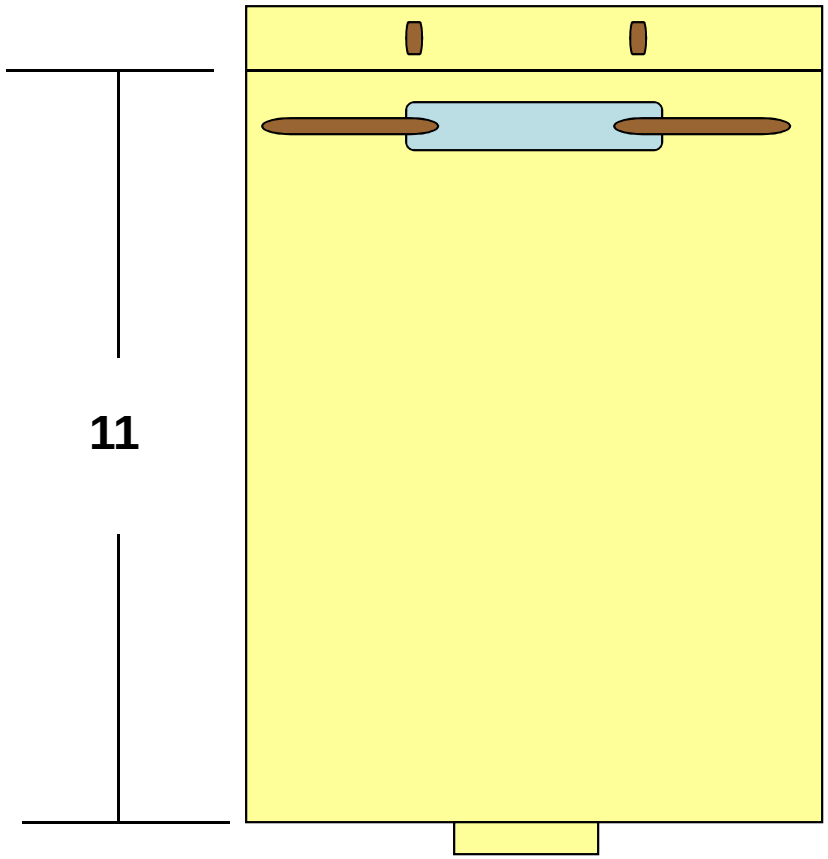

Custom File Backs

Note: Diagrams are NOT to scale or color